multimec® Navimec™

Technical Data

- through-hole or SMD
- 50mA/24VDC
- single pole/momentary
- 10.000.000 operations life time
- IP67 sealing
- temperature range:
  low temp: -40/+115°C
  high temp: -40/+160°C

Dimensions 1ZB (through-hole)

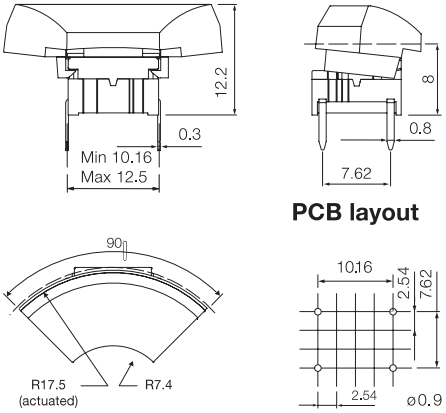

Dimensions 1ZC (SMD)

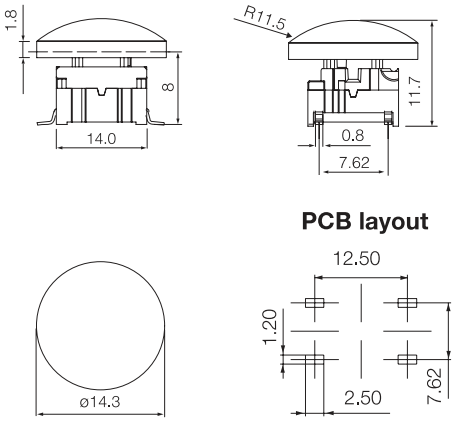

Recommended panel cut-out:
ø35.0-35.5 Depending on application

PCB layout TH

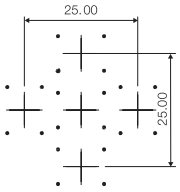

PCB layout SMD

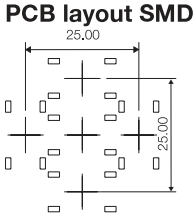

Dimensions Navimec™ Module

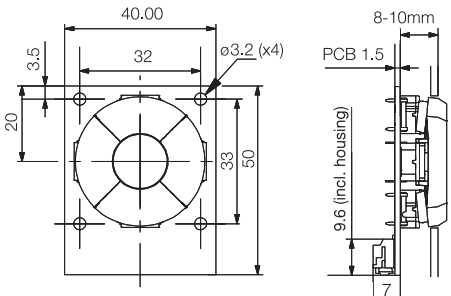

Dimensions (mm)

How to order

3 A

Switch

Mounting
T through-hole
S surface mount

L 6 low temp.
H 9 high temp.

Cap 1ZB

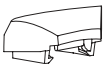

03 grey
06 white
09 black
30 ultra blue
40 dusty blue
42 aqua blue
50 metal dark blue
53 metal light grey
57 metal dark grey
58 metal bordeaux

3 F

Switch

Mounting
T through-hole
S surface mount

L 6 low temp.
H 9 high temp.

Cap 1ZC

Navimec™ Module

Part No. 9508000 — **Navimec™ Module excl. keycaps**
Part No. 950XXYY — **Navimec™ Module incl. keycaps**
Part No. 9509XXXYYY — **Navimec™ Module incl. keycaps with legends**

The module can be delivered with keycaps (4 x 1ZB and 1 x 1ZC) in solid colours or black keycaps with white legends.
For module incl. keycaps in solid colours (950XXYY) please indicate colour code for 1ZBXX and colour code for 1ZCYY.
For module incl. keycaps with legends (9509XXXYYY) please indicate legends for 1ZBXXX and legends for 1ZCYYY. All Caps are black with white legends. Please see legends available on page 23.

Examples: Module with 5 switches (4x3ATL6+1x3FTL6) mounted with 4x1ZB30 ultra blue and 1x1ZC42 aqua blue = 9503042.
Module with 5 switches (4x3ATL6+1x3FTL6) mounted with 4x1ZB09XD136 (legend arrow) and 1x1ZC09118 (legend OK) = 9509136118.

Circuit Diagram Navimec™ Module

(Front side View)

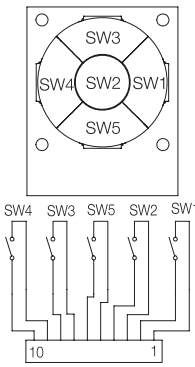

The plug on the Navimec™ module is JST SMT S10B-PH-SM3-TB or similar.
We recommend using
Cable socket: JST PHR-10 or similar
Contact: JST SPH-002T-PO.5S or similar.

Ordering example: 4x3ATL6+1ZB53 and 1x3FTL6+1ZC58 or Navimec™ Module 9505358

For updates of products and/or changes of specifications please see **www.mec.dk**